Arithmetic Circuits II

Submitted by:

Name	ID
Nawaf Alabdi	B00093759
Ali Abdelatief	B00099836

Submitted to:

Ms. Salsabeel Shapsough

Lab Instructor

American University of Sharjah

College of Engineering

Submitted on:

27/10/2024

Abstract

In this lab we will be building two arithmetic circuits. One will be a 4-bit adder with an overflow indicator. And another one that can preform both 4-bit addition and 4-bit subtraction using an input that can switch between both operations.

Introduction

In this lab, we will apply our design knowledge (creating truth tables, extracting minterms, simplifying them and implementing logic circuits) to create an adder circuit that adds two 4-bit binary numbers in 2's complement representation. We will also add an overflow detector for this circuit to detect whether the 4 bits are enough to represent the output number. The overflow detector indicates an overflow if the two numbers added have the same polarity (both are either positive or negative) but the output number has an opposite polarity. Afterwards, we will redesign the 4-bit adder circuit to include a control input (M) that can toggle the circuit between being an adder or a subtractor circuit.

Theoretical Background

The 7483 IC chip computes the addition of a carry in Boolean variable C0, and two 4-bit numbers A (represented by the boolean variables as its digits A1, A2, A3, A4) and B (represented by the boolean variable as its digits B1,B2,B3,B4), and returns the sum of these two numbers, S – also represented by the Boolean variables S1,S2,S4,S4 and C4, where C4 is the carry out digit obtained after computing all the digit sums.

The pins on the 7483 IC chip follows the sequence C0 (carryout), B1, A1, S1, A2, B2,S2, B3,A3,S3, A4, B4,S4,C4 ordered as shown in the data sheet below

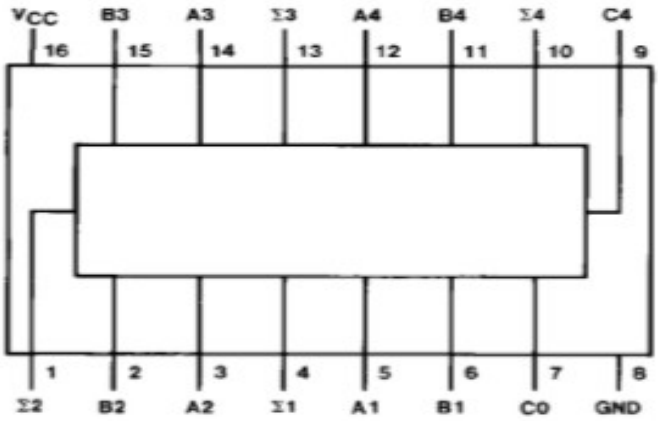

When summing two 4-bit signed numbers in 2's complement form, we use an overflow indicator to show that the resultant sum is outside the possible range of signed 4-bit outputs [-2^(4-1), 2^(4-1)-1] = [-8, +7], and hence the output does not have enough digits to express the final answer. An obvious sign that the sum has overflown is checking the signs of the input numbers. If there is a contradiction (i.e. summing two negative numbers yields a positive number, and vice versa.), then we have an overflow. Hence, in a truth table, the overflow indicator is only 1 if A4 = B4 = 1, while S4 = 0, OR if A4 = B4 = 0 while S4 = 1. This yields a min-term expression of A4.B4.(~S4) + (~A4).(~B4).S4

The subtraction operation A – B can be defined as A + (~B), where ~B is the 2's complement of the number B, which we obtain by inverting all the digits of B and adding a 1. Using this, we can build a 4-bit calculator that can do both addition and subtraction by modifying a 4-bit adder and adding a new input M, which is a subtraction indicator. If M is 1, we want to invert all of B's digits, and add 1. We do this by linking all digits of B to an XOR gate matched with M. Since M = 1, we have that $B_i \oplus M = B_i \oplus 1 = \sim(B_i)$. Then we add one by linking M to the adder's carry in C0 pin. Note that when M is 0, none of B's bits are inverted as $B_i \oplus 0 = B_i$ and the carry in is set to zero.

Experimental work, Results and Discussion

Lab Assignment:

Exercise 1:

Refer to the 7483/74283 datasheet and:

- **a.** Design a circuit to add two four-bit binary numbers using the 7483/74283.
- **b.** Design an overflow detector circuit that will turn ON an LED if the sign of the output result is invalid.

  HINT: Overflow happens when

  - Negative + Negative = Positive
  - Positive + Positive = Negative

Implement and test the circuit by adding <u>signed numbers</u> and completing the following table: (negative numbers must be initially in 2's complement format).

Addition	Binary Inputs								Binary Output					Overflow Indicator
A+B	A4	A3	A2	A1	B4	B3	B2	B1	C4	S4	S3	S2	S1	
7 + 7	0	1	1	1	0	1	1	1	0	1	1	1	1	1
4 + 6	0	1	0	0	0	1	1	0	0	1	0	1	0	1
6 + 5	0	1	1	0	0	1	0	1	0	1	0	1	1	1
7 + -4	0	1	1	1	1	1	0	0	1	0	0	1	1	0
-1 + 6	1	1	1	1	0	1	1	0	1	0	1	0	1	0
-5 + -7	1	0	1	1	1	0	0	1	1	0	1	0	0	1

A_4	B_4	S_4	Overflow ?
0	0	0	0
0	0	1	1
0	1	0	0
0	1	1	0
1	0	0	0
1	0	1	0
1	1	0	1
1	1	1	0

$$\overset{1}{A_3}\,\overset{1}{B_3}\,\overset{0}{\overline{S}_4} + \overset{0}{\overline{A}_3}\,\overset{0}{\overline{B}_3}\,\overset{1}{S_4} = \text{Overflow}$$

$$F = AB\overline{C} + \overline{A}\,\overline{B}C$$

$$\overline{F} = (\overline{A} + \overline{B} + C)(A + B + \overline{C})$$

$$= \overline{A}B + \overline{A}\,\overline{C} + A\overline{B} + \overline{B}\,\overline{C} + AC + BC$$

$$= (A \oplus B) + (B \odot C) + (A \odot C)$$

$$\therefore F = (A \odot B)(B \oplus C)(A \oplus C)$$

$$\text{Overflow} = (A_4 \odot B_4)(B_4 \oplus S_4)(A_4 \oplus S_4)$$

Part a :

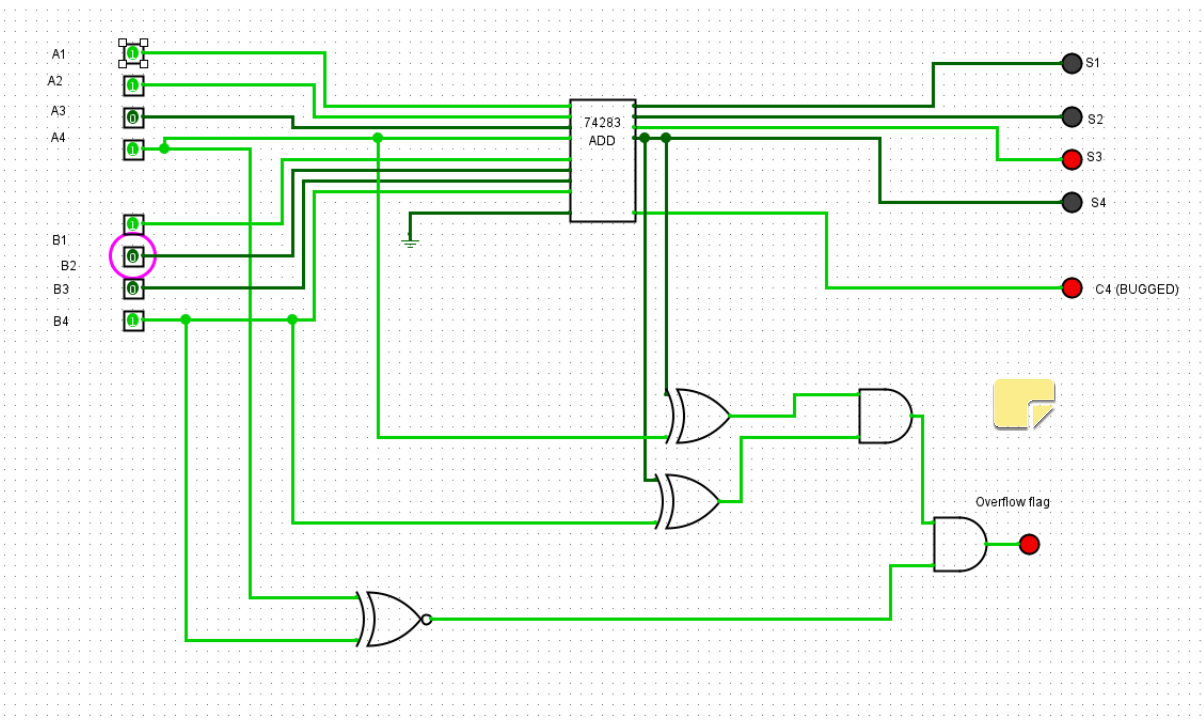

Part b : Check attached file LAB 7 Q1.brd

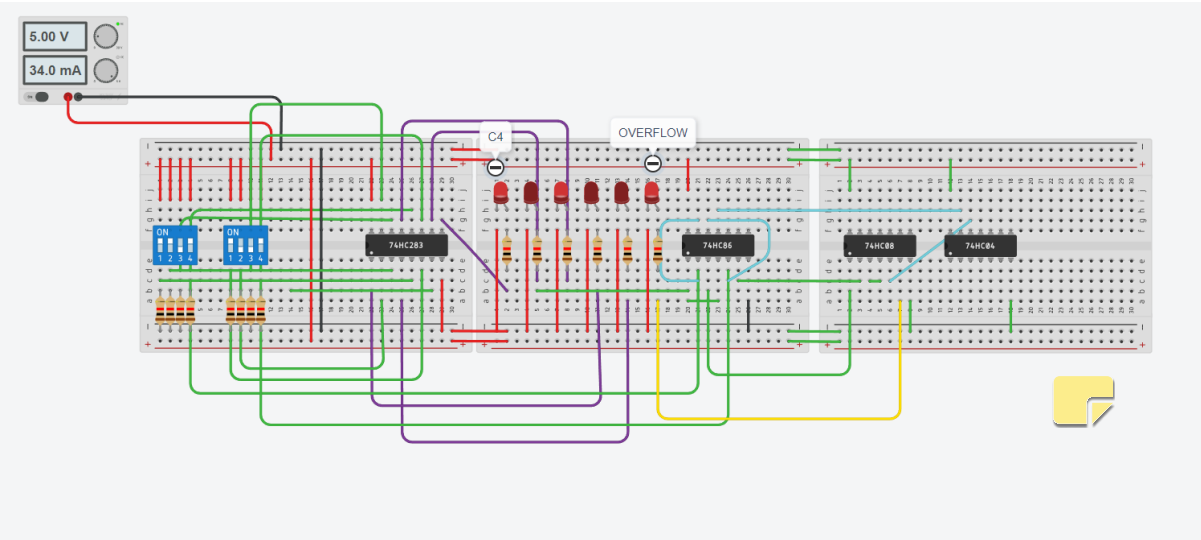

Exercise 2:
Design an adder/subtractor circuit using 7483/74283 and 7486 chips. A control input, M, determines whether the circuit adds or subtracts two four-bit numbers using two's complement binary arithmetic.

Control Input (M)	Operation
0	A+B
1	A-B

Implement and test the circuit and fill the following table:

Control M	Decimal Number		Binary Inputs								Binary Output				
	A	B	A4	A3	A2	A1	B4	B3	B2	B1	C4	S4	S3	S2	S1
0	7	0	0	1	1	1	0	0	0	0	0	0	1	1	1
0	6	1	0	1	1	0	0	0	0	1	0	0	1	1	1
0	4	-8	0	1	0	0	1	0	0	0	0	1	1	0	0
1	-1	-8	1	1	1	1	1	0	0	0	1	0	1	1	1
1	-8	-6	1	0	0	0	1	0	1	0	0	1	1	1	0
1	-5	-4	1	0	1	1	1	1	0	0	1	1	1	1	1

(Binary inputs B4 B3, B2, B1 are 2's complement representation of decimal number B. Note that in the circuit, we take B, invert each digit then add one, which produces the complement, this is not evident in the table as it happens in the circuit)

Part a

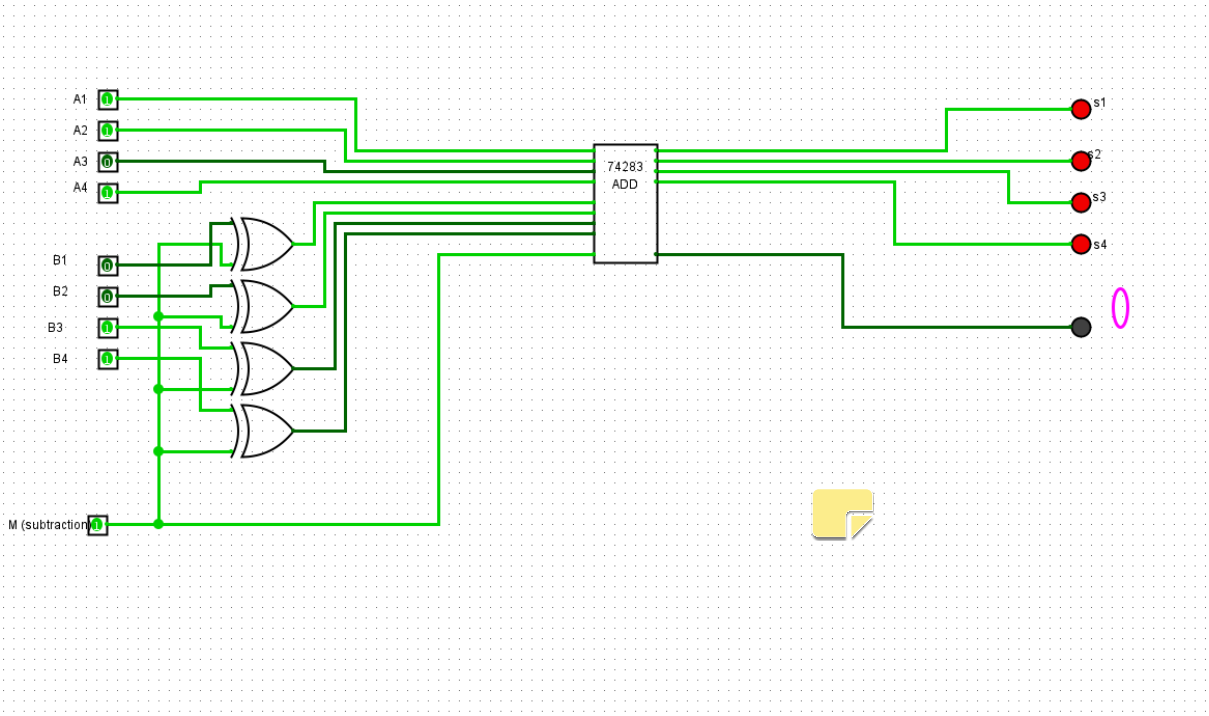

Part b: Please check the attached file LAB 7 Q2.brd

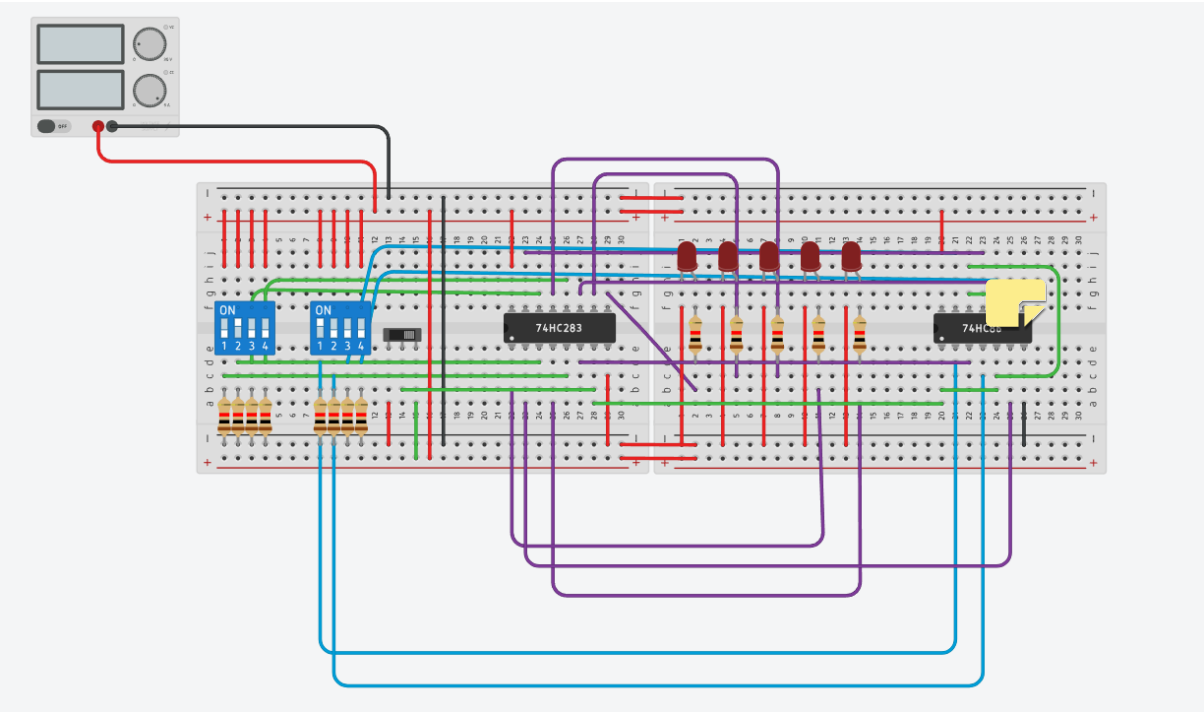

Conclusion

In this lab, we went over the concept of adder circuits, and we implemented adders using overflow detectors and control inputs that can switch between adders and subtractors.